kamstrup

Data sheet

flowIQ® 2200

» **RF**
» **Encoded**

- Multiple radio options available
- Ultrasonic measurement
- Sustainable measurement accuracy
- Temperature measurement
- IP68 Vacuum sealed construction
- Lead free and certified to NSF/ANSI/CAN 61
- Flow measurement in display
- Acoustic leak detection in service and distribution lines



Contents

Technical data	4
Material	5
Meter sizes	5
Meter face details	6
Core features	7
Meter modes	7
Display and info codes	8
Data registers	9
Integrated communication	10
State of the art meter reading system (READy)	11
Pressure loss	11
Ordering details	12
Configuration - flowIQ® 2200	13
Dimensional sketches – flowIQ® 2200	15
Dimensions	17
Accessories	17

Electronic ultrasonic cold-water meter for measurement of cold-water consumption in households, multi-unit buildings and industry

Sustainable accuracy
Ultrasonic flow measurement guarantees sustainable accuracy and longevity. Ultrasonic flow measurement is based on the transit time method, and all measurements, references, readings, calculations and data communication are controlled by an advanced, specially designed electronic circuit. Thus, the meter includes no moving parts, which makes flowIQ® 2200 less sensitive to wear and tear and impurities in the water.

Construction
The meter is hermetically closed and vacuum-sealed to prevent humidity from reaching the electronics and avoid condensation between the glass and display. The meter is IP68 (submersible) type tested and suitable for installation in meter pits.

Installation
flowIQ® 2200 is easy to install in all operating environments, horizontally as well as vertically, independent of piping and installation conditions. Consumption data can be read visually from the display, using an optical eye, and remotely read by various integrated communication protocols.

Specific features
flowIQ® 2200 measures the water and environment temperatures and it includes acoustic leak detection, securing that water loss is discovered quickly.

The unique combination of all the flowIQ® 2200 features reduce current operating costs to measure water usage and minimizes unexpected expenses in connection with possible leakage.

Environmentally friendly
The meter has been approved according to Drinking Water Standards and is certified to NSF/ANSI/CAN 61. The meter housing and measuring part are made of the high-performance thermoplastic material polyphenylene sulfide (PPS) with 40% fiberglass, which is free from lead and other heavy metals. The environmental report, Carbon Footprint, documents the meter's high reusability and low environmental impact, including recycling of materials.

Hygiene
To protect the health of the consumers Kamstrup has a hygienic manufacturing process of the water meters.

Kamstrup also has a highly automated manufacturing process and only uses materials approved for drinking water. Furthermore, the products get disinfected before dispatch. The hygiene is being controlled by external accredited laboratories and by frequent audits.

General description
flowIQ® 2200 is a hermetically sealed water meter intended for measurement of cold and *reclaimed water consumption in residentials and multi-unit buildings.

flowIQ® 2200 employs the ultrasonic measurement principle, based on Kamstrup's experience since 1991, with the initial development and production of static ultrasonic meters.

flowIQ® 2200 is available in an Encoded Output version with 2 x A-cell battery supply and a RF version with 1 x D-cell battery supply.

One of flowIQ® 2200's many advantages is the fact that it has no wearing parts, which ensures a high and stable accuracy throughout its lifetime. flowIQ® 2200 complies with all the AWWA C715-18 guideline for Ultrasonic Water Meters.

flowIQ® 2200 measures the water consumption electronically, as a volume, using a pair of ultrasonic signals. Through two ultrasonic transducers, an ultrasonic signal is sent with and against the flow direction. A transducer serves both as a 'speaker' when transmitting and as a 'microphone' when a signal is received. The ultrasonic signal traveling with the flow will be the first to reach the opposite transducer, while the signal running against the flow will be received a little later.

The time difference between the two signals can be converted into flow velocity, and thereby also into a volume. The measuring principle is a proven, long-term stable and accurate measuring principle.

In addition to volume reading, an indication of current flow and several other information codes are displayed. All registers are saved daily in the meter data logger (EEPROM) and are kept for 460 days. Furthermore, monthly data for the latest 36 months (3 years), hourly data for the latest 100 days (about 3 and a half months) and 50 info code events are saved.

flowIQ® 2200 is powered by an internal lithium battery which can provide up to 20 years operating life.

flowIQ® 2200 is available with a choice of integrated data communication options:

- 912.5, 915 or 918.5 MHz - RF
- 450-470 MHz - RF
- Encoded Output

The meter is fitted with an optical eye which makes it possible to read saved consumption data and info codes, stored in the meter's data logger. Using an optical reading head, it is also possible to change the meter configuration, e.g. data packages.

flowIQ® 2200 can and must only be opened by Kamstrup A/S. If the meter has been opened and the sealing has been broken, the meter is no longer valid for billing purposes and the warranty is void.

** For information concerning reclaimed water we refer to document no.: FILE100003532*

Technical data

Electrical data

Battery (flowIQ® 2200 RF)	1 x D-Cell battery, 3.6V, 19Ah. The battery warranty does not apply at meter temperatures above t_{BAT} > 95 °F / 35° C
Battery (flowIQ® 2200 E0)	2 x A-Cell battery, 3.6V, 3.6Ah. The battery warranty does not apply at meter temperatures above t_{BAT} > 95 °F / 35° C

Mechanical data

Protection class	IP68-rated (waterproof/submersible)
Mechanical environment	Class M1 (Measuring Instruments Directive classification)
Upstream/Downstream pipe length requirement	U0/D0
Ambient/meter temperature	
- flowIQ® 2200, composite	35... 130 °F / 1.5... 55 °C
- flowIQ® 2200, metal	35... 130 °F / 1.5... 55 °C
Water temperature	
- flowIQ® 2200, composite	33... 120 °F / 0.5... 50 °C
- flowIQ® 2200, metal	33... 120 °F / 0.5... 50 °C
Storage temp. empty sensor	-10... 140 °F / -20... 60 °C
Maximum operating pressure	250 PSI (17 bar)

Accuracy

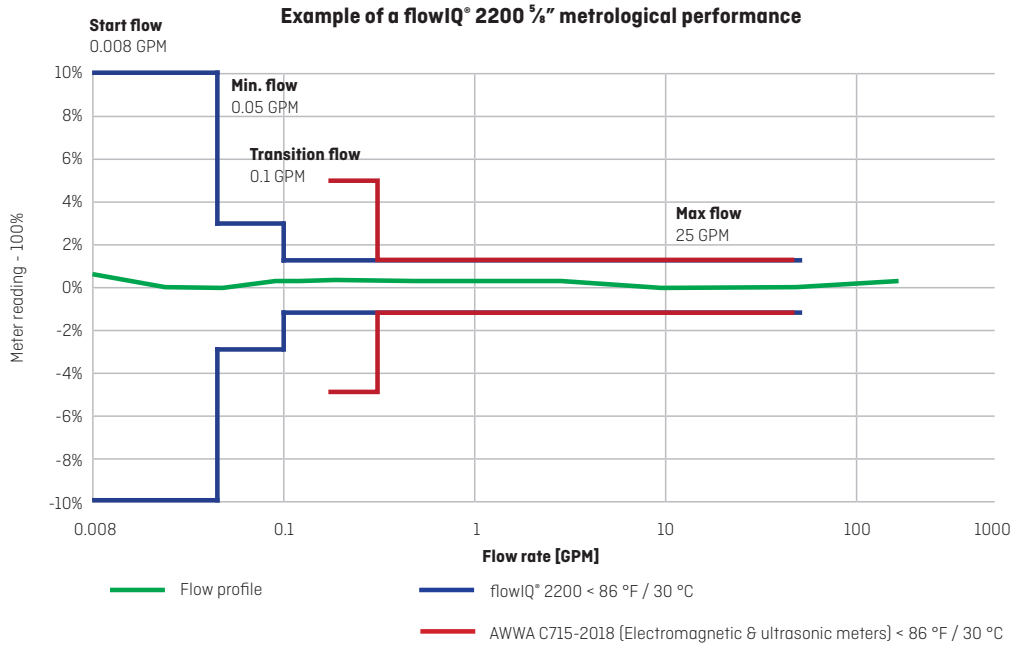

The above flow profile is an example of a flowIQ® 2200 5/8" metrological performance and does not represent a generic profile for all Kamstrup water meters. Each meter will have an unique flow profile however all within both Kamstrup and AWWA C715-2018 limitations.
Note: At flows between 'Start flow' and 'Maximum flow' measurement occurs – however the accuracy is only guaranteed in the range from minimum flow to maximum flow.

Approved meter data

Certified to NSF/ANSI/CAN 61
Complies to part 15 of the FCC rules, ISED, IFT and with AWWA C715-18

Material

Wetted parts (composite model)

Meter housing and flow part	Polyphenylene sulfide (PPS) with fiberglass (40 %) reinforcement, PSU, extenders made from PA12
Reflectors	Stainless steel 316

Wetted parts (2-part body)

Flow part, threaded	Stainless Steel 316L
O-ring/gasket	EPDM
Measuring tube	PPS with fiberglass
Reflectors	Stainless steel

External meter parts

Top ring (sealing)	Polycarbonate (gray)

Meter sizes

flowIQ® 2200 is available in the sizes shown in table below:

XX = Communication module Y = Battery suply ZZ = Country code

Type number	Meter size Inches	Start flow[1] (S) [GPM]/ [L/h]	Min. flow[1] [GPM]/ [L/h]	Transition flow [GPM]/ [L/h]	Max flow [GPM]/ [m³/h]	Sat. flow rate [GPM]/ [m³/h]	Pressure loss SMOC [PSI]/ [bar]	Connection on meter NPSM thread	Lay length [Inches]/ [mm]	Strainer	Temp. measurement of water
02-K-XX-Y-1-8A-8ZZ	⅝" x ½"	0.008/ 2	0.05/ 11.4	0.1/ 22.7	25/ 5.68	35/ 7.95	6.2/ 0.43	¾"	7½"/ 190	Yes	Yes
02-K-XX-Y-1-8B-8ZZ	⅝" x ¾"	0.008/ 2	0.05/ 11.4	0.1/ 22.7	25/ 5.68	35/ 7.95	7.7/ 0.53	1"	7½"/ 190	Yes	Yes
02-K-XX-Y-1-8R-8ZZ	⅝" x ¾"	0.008/ 2	0.05/ 11.4	0.1/ 22.7	25/ 5.68	35/ 7.95	7.7/ 0.53	1"	5.1"/ 130	Yes	Yes
02-K-XX-Y-1-8C-8ZZ	¾"	0.011/ 2.5	0.05/ 11.4	0.1/ 22.7	32/ 7.27	45/ 10.22	9.0/ 0.62	1"	7½" or 9"/ 229	Yes	Yes
02-L-XX-Y-1-8B-8ZZ	⅝" x ¾"	0.013/ 3	0.10/ 22.8	0.15/ 34.1	25/ 5.68	35/ 7.95	3.8/ 0.26	1"	7½"/ 190	No	Yes
02-L-XX-Y-1-8N-8ZZ	¾"	0.013/ 3	0.10/ 22.8	0.15/ 34.1	35/ 7.95	49/ 11.13	3.9/ 0.27	1"	7½"/ 190	No	Yes
02-L-XX-Y-1-8L-8ZZ	¾"	0.013/ 3	0.10/ 22.8	0.15/ 34.1	35/ 7.95	49/ 11.13	3.9/ 0.27	1"	9"/ 229	No	Yes
02-L-XX-Y-1-8D-8ZZ	1"	0.022/ 5	0.25/ 56.8	0.4/ 90.8	55/ 12.49	77/ 17.49	3.1/ 0.21	1¼"	10¾"/ 273	No	Yes

Note! 02-K-02-D-1-8C-8UB can be ordered with a 1½" extension and washer (installed by the customer) to fit 7½" or 9" lay lengths

Note! Flow specifications only apply at temperatures below 86 °F / 30 °C

[1] At flows between 'Start flow' and 'Maximum flow' measurement occurs – however the accuracy is only guaranteed in the range from minimum flow to maximum flow

Meter face details

Meter information in permanent laser engraved text

RF top label

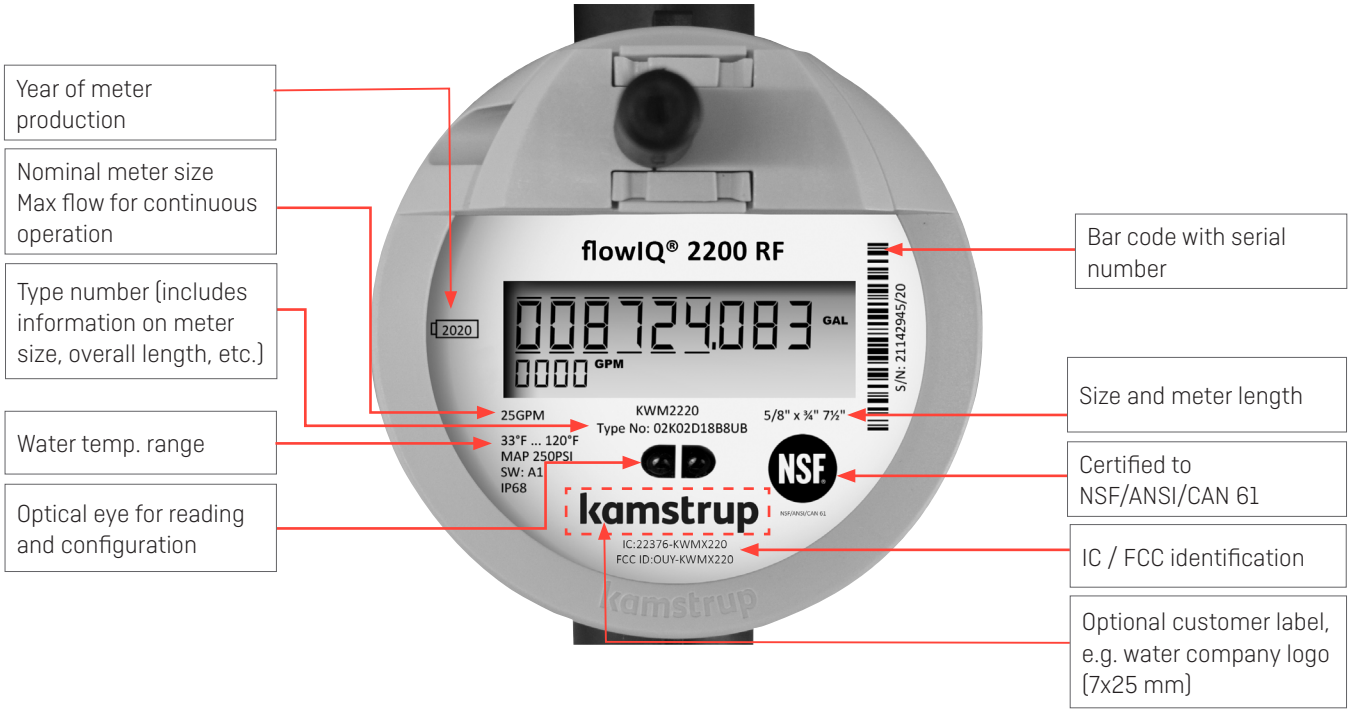

Encoded top label

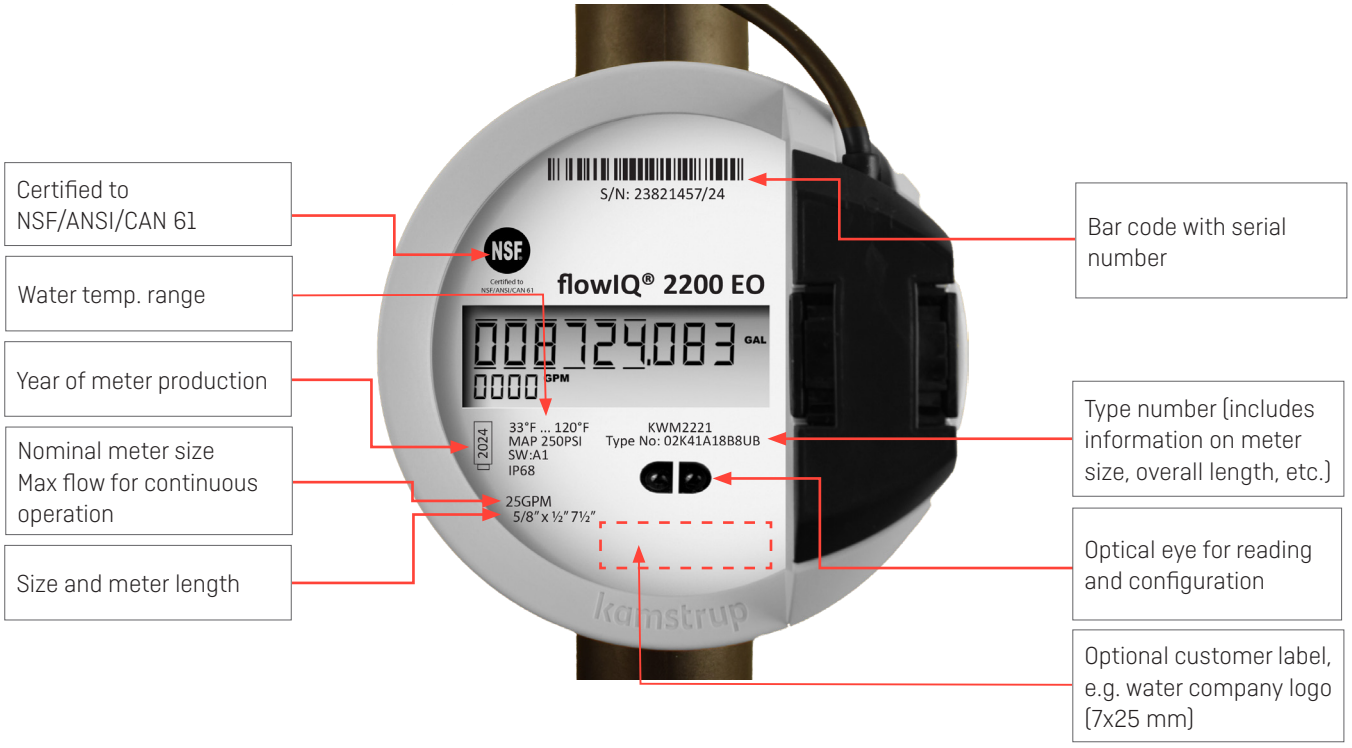

Core features

Water meters placed throughout the network make it possible to gather information that can be of vital importance for an effective water supply, asset management and improved customer service.

Acoustic leakage detection
flowIQ® 2200 water meter introduces integrated acoustic leak detection that allows you to monitor your service connections for possible leaks. Like a fine-meshed network of noise-loggers, all your meters monitor the noise in the distribution lines and service connections to detect possible leaks – 24/7.

Temperature monitoring
flowIQ® 2200 measures water and ambient temperatures respectively. Information on temperatures above or below the configured temperature in the meter will warn the utility of potential frost damage or quality issues. These measurements can be used to monitor the installation and will indicate the water's quality.

Current flow display
Besides the consumed volume, flowIQ® 2200 also shows the current flow in the display. The flow display has been designed with user experience in mind, where it can be advantageous, for example during installation, to be able to see the current consumption. In this context, it is important to stress that the metrological approval of the water meter is related to the volume reading only. Due to the meter's update time, the flow display, in case of rapidly increasing/decreasing flow, may turn out to be slower than the real flow and not a one-to-one correlation between the flow display and the volume growth. In general, one would expect the flow display to stabilize after about half a minute of constant flow and thereafter to be consistent with volume growth.

Consumption above max flow
The meter logs information on consumption above max flow. This information can be used to indicate if the meter size for a given installation is correct.

Consumption histogram
The meter tracks consumptions in different flow intervals for further analysis of the consumption patterns for the specific installation.

Meter modes

flowIQ® 2200 can operate in two modes, Normal and Verification mode.
Verification mode is only used by authorized laboratories during verification.

flowIQ® 2200 RF	Normal mode	Verification mode
Flow measurement and flow display update	1 s	0.125 s
Volume integration and volume display update	8 s	1 s

flowIQ® 2200 EO	Normal mode	Verification mode
Flow measurement and flow display update	2 s	0.125 s
Volume integration and volume display update	16 s	1 s

Display and info codes

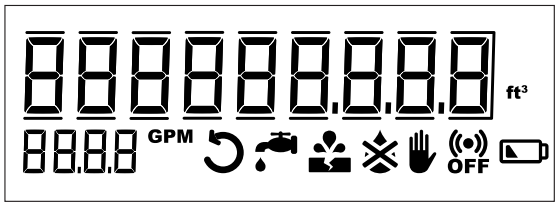

The large display with totalized volume, flow rate and intuitive info codes on flowIQ® 2200 makes it easy for end users to understand their own consumption data.

flowIQ® 2200 includes a large number of intelligent info codes and alarms. An info code indicates a special condition in the meter. If the info code is available in the display, the related symbol is on when it has been activated. If the 'condition' is not active, the sign is OFF. The info codes provide you with the exact knowledge you need to target your efforts within operations optimization, customer information, water loss and tampering. The info codes in the display have the following meaning and function:

Info code	Meaning
	The water in the meter has not been stagnant for one continuous hour during the last 24 hours. This can be a sign of a leaky faucet or toilet cistern or indicate a leakage after the meter.
	The water consumption has been consistently high for half an hour, which indicates a pipe burst.
	Attempt of fraud. The meter is no longer valid for billing.
	The meter is dry. In this case nothing will be measured.
	The water flows through the meter in the wrong direction.
OFF	RADIO OFF flashes. The meter is still in transport mode with the built-in radio transmitter turned off. The transmitter turns on automatically when water runs through the meter for the first time.*
OFF	RADIO OFF lights permanently. The radio is switched off permanently. Can be activated via METERTOOL.*
	The symbol appears when the expected capacity left is 6 months or less.

	Switch off automatically when the condition that activated them no longer exists.
	Disappears when the water has been stagnant for one hour.
	Disappears when the consumption falls to normal level.
	Disappears when the water no longer flows in the wrong direction.
	Disappears when the meter is filled with water.

**RADIO OFF is not available for Encoded Output meters*

Data registers

The water meter has a permanent memory, in which the values of various data loggers are saved. The loggers can be read via the meter's optical eye and from communications protocols

The following registers are logged:

Description	Yearly logger	Monthly logger	Daily logger	Hourly logger
Logger depth	20 years	36 months	460 days	2400 hours
Operating hours	✓	✓	✓	✓
Info codes incl. hour counter	✓	✓	✓	✓
Volume	✓	✓	✓	✓
Volume reverse	✓	✓	✓	✓
Acoustic Noise Value Day			✓	
Flow max incl. date	✓	✓		
Flow min. incl. date	✓	✓		
Flow max day incl. Timestamp			✓	
Flow min. day incl. Timestamp			✓	
Water temp. max	✓	✓	✓	
Water temp. min.	✓	✓	✓	
Water temp. avg.	✓	✓	✓	
Ambient temp. max	✓	✓	✓	
Ambient temp. min.	✓	✓	✓	
Ambient temp. avg.	✓	✓	✓	

Every time the information code changes, date and info codes are logged. Thus, it is possible to data read the latest 50 changes of the information code as well as the date the change was made.

Integrated communication

The meter supports a variety of different communication options depending on meter type. All radio supported meters can be used with Kamstrup's external antenna. Transmission properties and data packages are defined in the configuration number YY-ZZZ. These can be changed with METERTOOL, MeterToolX or READy App through the optical IR interface or with a READy converter.*

**Depending on communication protocol*

RF

Kamstrup RF is based on Wireless M-Bus which is a mature and proven technology for remote reading of smart meters. Wireless M-Bus provides a robust, simple and secure reading of meters and requires a low initial investment, but is flexible enough to be expanded whenever desired. Wireless M-Bus is based on an European standard (EN 13757-4) applicable to devices for reading consumption of water, electricity or energy. The data encryption consists of a 128-bit AES counter mode encryption. Both AMR 912.5, 915 and 918.5 MHz and AMI 450-470 MHz are available.

For additional information about the Kamstrup RF communication module, please refer to the module data sheet, document no.: FILE100003480.

Encoded Output

The Sensus Encoded Output and TouchRead are implemented based on Sensus specification UI-1203 and UI1204. Encoded Output is compatible with several 3rd party RF network systems. Kamstrup Encoded Output supports Sensus Encoded Output systems and Sensus TouchRead systems. In addition, Neptune ProRead, Neptune E-coder systems and others are supported.

For additional information about the Kamstrup Encoded Output communication module, please refer to the Encoded Output module data sheet, document no.: FILE100003729.

State of the art meter reading system (READy)

Standardized and open communication
902-928 MHz band RF is an open standard, following EN13757-4:2010, which means that while the flowIQ® 2200 can be configured with or without encryption of the transmitted signal, encryption is required in the United States.

Encryption protects personal data against unauthorized monitoring. Furthermore, the encryption file provides easy access to import meter data for reading programs.

Pressure loss

According to AWWA C715-18 Type I guideline the maximum pressure loss must not exceed 10 PSI (0.69 bar) at SMOC.

The following graph shows pressure loss with respect to flow rate:

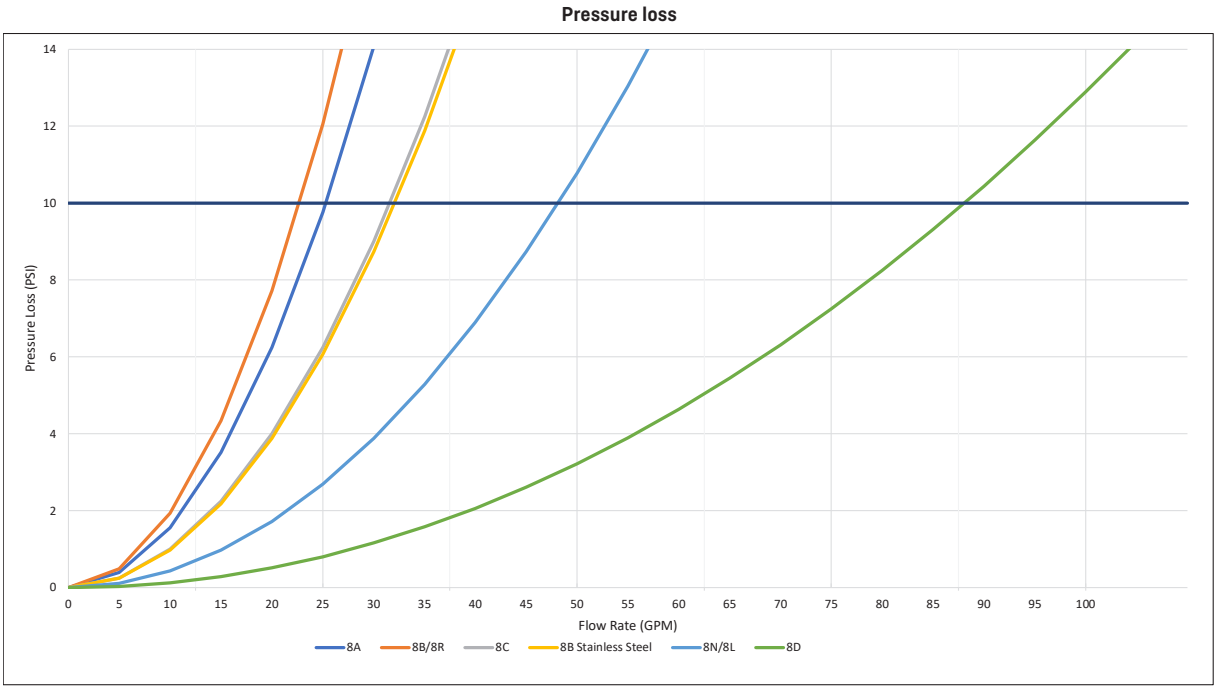

See Technical description for Water Meters North America: Document no.: FILE100001331, for more information about pressure loss.

Ordering details

Start your order by stating the type number of the selected model of flowIQ® 2200.

The type number includes information on meter type, meter version, size, lay length, service connection and time zone.

Subsequently the meter configuration, which determines customer-specific requirements such as number of digits in display etc., is selected. The configuration is completed during programming of the final meter.

Accessories are enclosed separately to be mounted by the installer.

Meter type - flowIQ® 2200

Type	□□	□	□□	□	□	□□	□	□□
Meter generation								
Second generation	02							
Mechanical design								
Composite, PPS		K						
Composite, PPS 1"		N						
Stainless steel		L						
Communication								
RF			02					
Encoded Output			41					
Power supply								
D-cell				D				
2 x A-cell				A				
Dynamic range								
AWWA C715-18					1			
Meter size								
⅝" x ½" (25GPM); ¾" NPSM; 7½"						8A		
⅝" x ¾" (25GPM); 1" NPSM; 7½"						8B		
⅝" x ¾" (25 GPM); 1" NPSM; 5.1"						8R		
¾" (32GPM); 1" NPSM; 7½" or 9"; includes 1½" extension						8C		
¾" (35GPM); 1" NPSM; 7½"						8N		
¾" (35GPM); 1" NPSM; 9"						8L		
1" (55GPM); 1¼" NPSM; 10¾"						8D		
Meter type								
Cold water							8	
Reclaimed water[1)]							9	
Country code								
North America, FCC approved and certified to NSF/ANSI/CAN 61								UB
Canada, ISED approved and certified to NSF/ANSI/CAN 61								CA
Mexico, IFT approved and certified to NSF/ANSI/CAN 61								MX

[1)] *Only available for RF communication*

The features included in the type number cannot be changed once the meter has been produced.

Configuration - flowIQ® 2200

Config	DDD □□□	JJ □□	LLL □□□	MMMM □□□□	N □	P □	S □	U □	RR □□	CCC □□□	V □	T □	YY □□	ZZZ □□□
Display views														
Standard	810													
GMT offset (time zone)														
USA Eastern (GMT-5)		28												
USA Central (GMT-6)		24												
USA Mountain (GMT-7)		20												
USA Pacific (GMT-8)		16												
Target date (handled as order data)														
Max values averaged over time (1..120 min.)														
2 minutes			002											
Customer label (2060-) Alphanumeric														
Customer label blank (default)				5000										
Kamstrup serial number				0010										
Incremented number - 8 digits				8004										
Customer specific labels				MMMM										
Leakage message limit														
OFF					9									
Flow continuously > 0.25% of max flow					2									
Flow continuously > 0.5% of max flow					3									
Flow continuously > 1.0% of max flow					4									
Flow continuously > 2.0% of max flow					5									
Pipe burst limit														
OFF						0								
Flow > 5% of max flow for 30 minutes						1								
Flow > 10% of max flow for 30 minutes						2								
Flow > 20% of max flow for 30 minutes						3								
Ambient Temperature low limit														
OFF							0							
Ambient temperature < 2 °C/ 36 °F							2							
Ambient temperature < 3 °C / 37 °F							3							
Ambient temperature < 6 °C / 43 °F							6							
Ambient Temperature high limit														
OFF								0						
Ambient temperature > 35 °C / 95 °F								3						
Ambient temperature > 45 °C / 113 °F								6						
Data logger profile														
Standard RF									04					
Standard Encoded Output									15					

To be continued on next page...

Configuration - flowIQ® 2200

Config	DDD □□□	JJ □□	LLL □□□	MMMM □□□□	N □	P □	S □	U □	RR □□	CCC □□□	V □	T □	YY □□	ZZZ □□□
...continued from previous page														
Display resolution (alphanumeric)														
0000000.00 USgal - 0.01 GPM - Billing in 1,000s (recommended for residential meters)										220				
000000000 ft^3 - 0000 GPM - Billing in 1,000s (recommended for district meters)										154				
For additional options please refer to FILE100002712														
Temperature units of measure														
Fahrenheit											1			
Celsius											0			
Encryption level														
Encryption with separately forwarded key												3		
No encryption (applicable for Encoded meters)												0		
Communication														
For communication protocols please refer to the section "Integrated Communication"														

	DDD	JJ	LLL	MMMM	N	P	S	U	RR	CCC	V	T	YY	ZZZ
Unless otherwise stated in the order, Kamstrup supplies the following:	810	□□	002	5000	4	3	3	3	04	220	1	3	YY	ZZZ

Note: JJ (time zone) and target date are not predefined and has to be chosen in the ordering system.

Dimensional sketches – flowIQ® 2200

Type: 8A – Size: 25 GPM ⅝" x ½" x 7½"

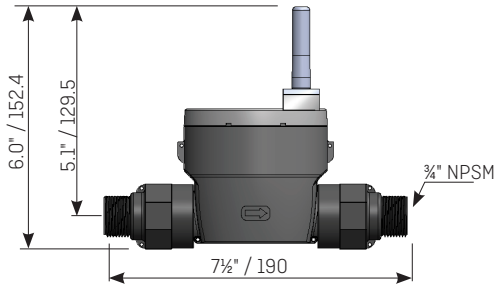

Type: 8B – Size: 25 GPM ⅝" x ¾" x 7½"

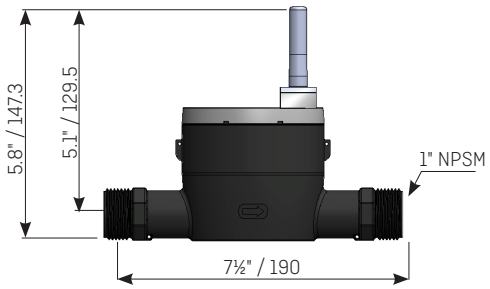

Type: 8R – Size: 25 GPM ⅝" x ¾" x 5.1"

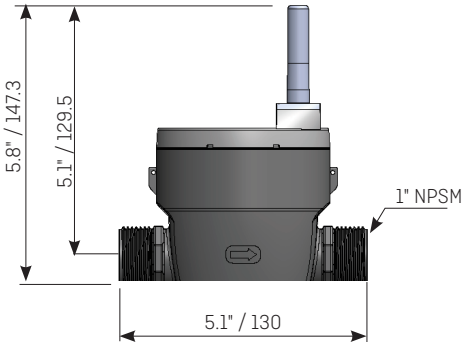

Type: 8C – Size: 32 GPM ¾" x ¾" x 7½"

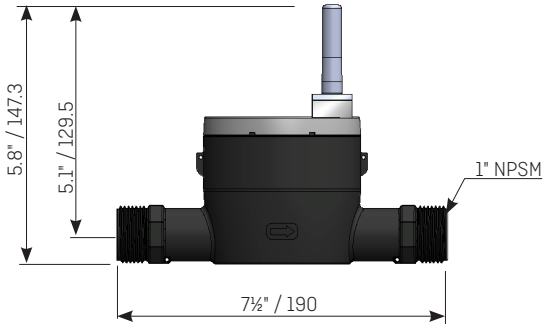

Type: 8C+ – Size: 32 GPM ¾" x ¾" x 9"

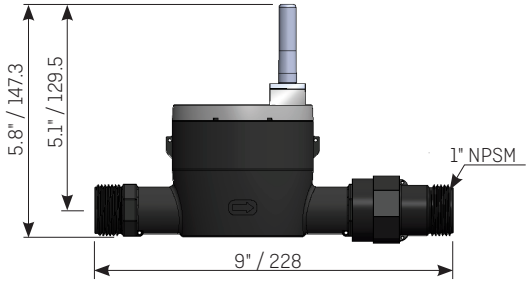

Encoded Output has the exact same dimensions as RF – apart from the meter cup height.

Examples:

Type: 8B – Size: 25 GPM ⅝" x ¾" x 7½"

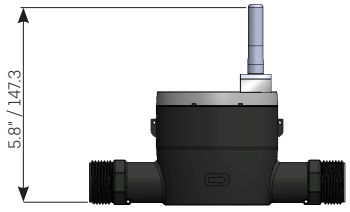

Type: 8R – Size: 25 GPM ⅝" x ¾" x 5.1"



Dimensional sketches – flowIQ® 2200

Type: 8B – Size: 25 GPM ⅝" x ¾" x 7½"

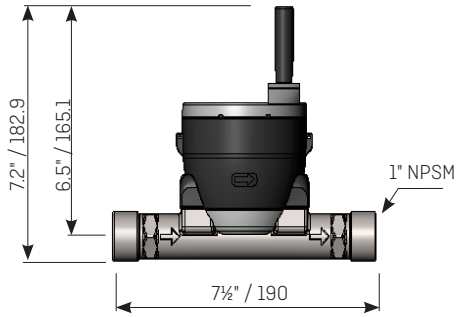

Type: 8N – Size: 35 GPM ¾" x 1" x 7½"

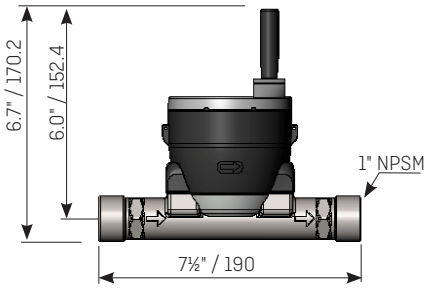

Type: 8L – Size: 35 GPM ¾" x 1" x 9"

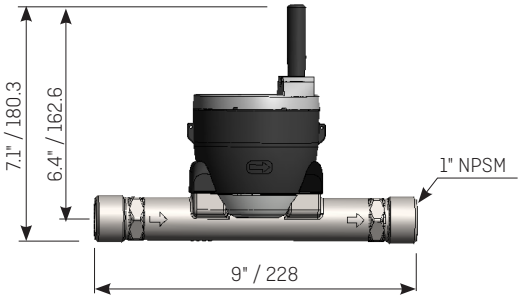

Type: 8D – Size: 55 GPM 1" x 1¼ " x 10¾"

This meter type is also available in a composite version

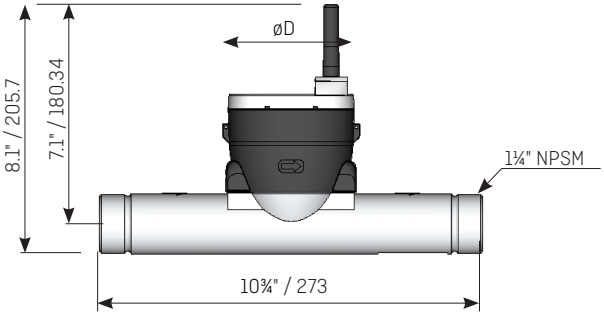

NOTE! Same threads for in- and outlet. / Dimensions: Inches/mm

Dimensions

flowIQ® 2200 RF

Mechanical design	Meter type	Meter size GPM	NPSM thread	L	H	øD	Weight approx. [Lbs / Kg]
				[Inches / mm]			
Composite	8A	25	¾"	7½" / 190	6.0" / 152.4	3.6" / 91.4	1.48 / 0.67
Composite	8B	25	1"	7½" / 190	5.8" / 147.3	3.6" / 91.4	1.23 / 0.56
Composite	8R	25	1"	5.1" / 130	5.8" / 147.3	3.6" / 91.4	1.15 / 0.52
Composite	8C	32	1"	7½" / 190	5.8" / 147.3	3.6" / 91.4	1.26 / 0.57
Composite	8C+	32	1"	9" / 228	5.8" / 147.3	3.6" / 91.4	1.37 / 0.62
Stainless steel	8B	25	1"	7½" / 190	7.2" / 182.9	3.6" / 91.4	2.25 / 1.02
Stainless steel	8N	35	1"	7½" / 190	6.7" / 170.2	3.6" / 91.4	2.25 / 1.02
Stainless steel	8L	35	1"	9" / 228	7.1" / 180.3	3.6" / 91.4	2.45 / 1.11
Stainless steel	8D	55	1¼"	10¾" / 273	8.1" / 205.7	3.6" / 91.4	3.17 / 1.44

flowIQ® 2200 E0

Mechanical design	Meter type	Meter size GPM	NPSM thread	L	H	øD	Weight approx. [Lbs / Kg]
				[Inches / mm]			
Composite	8A	25	¾"	7½" / 190	2.1" / 55	3.6" / 91.4	0.97 / 0.44
Composite	8B	25	1"	7½" / 190	2.1" / 55	3.6" / 91.4	0.90 / 0.41
Composite	8R	25	1"	5.1" / 130	2.1" / 55	3.6" / 91.4	0.79 / 0.36
Composite	8C	32	1"	7½" / 190	2.1" / 55	3.6" / 91.4	0.90 / 0.41
Composite	8C+	32	1"	9" / 228	2.1" / 55	3.6" / 91.4	1.01 / 0.46
Stainless steel	8B	25	1"	7½" / 190	3.9" / 101	3.6" / 91.4	1.98 / 0.90
Stainless steel	8N	35	1"	7½" / 190	3.9" / 101	3.6" / 91.4	1.98 / 0.90
Stainless steel	8L	35	1"	9" / 228	3.9" / 101	3.6" / 91.4	2.20 / 1.00
Stainless steel	8D	55	1¼"	10¾" / 273	4.2" / 109	3.6" / 91.4	2.93 / 1.33

Accessories

See accessories for water meters on Kamstrup.com, document no.: FILE100000644.

Accessories are ordered separately in CPQ (Kamstrup ordering system) and will be delivered as single parts in the packaging.

Kamstrup A/S • FILE100000648_R_EN-US_11.2026

Kamstrup Water Metering, LLC
2855 Forsyth Commerce Way, Building 200
Cumming, GA 30040, USA
T: +1 (404) 835-6716
info-us@kamstrup.com
kamstrup.com